Pop up with overflow hole

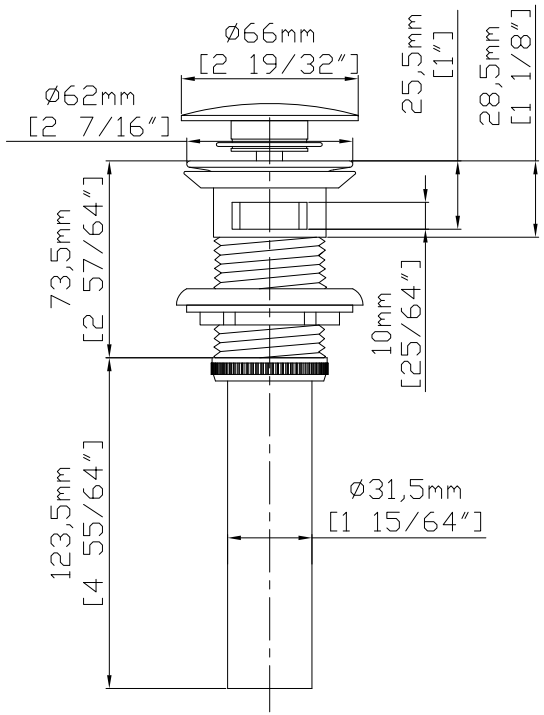

- Clean the contact surface before installation.
- This item is not supposed to be twisted with any wrench.
- Do not use polishing powder or other detergent with powders to clean the pop-up drain.

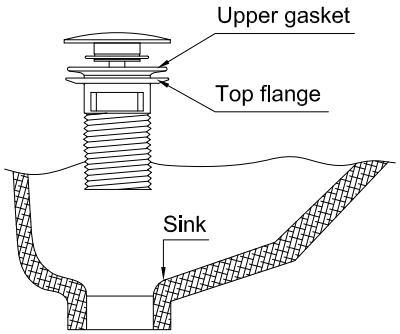

1.Align the upper gasket onto the top flange.
2.Tape some thread seal tape onto the interface of the tailpiece,and connect it to the top flange.
3.Insert the pop-up drain body up through the bottom of the sink.

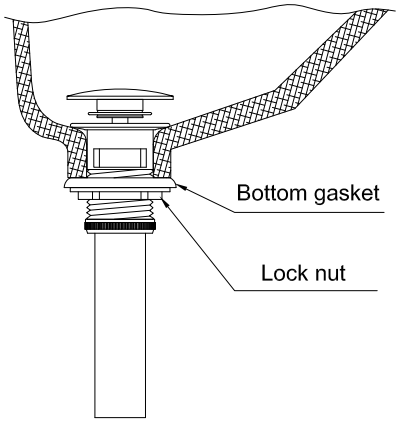

1.Align the botton gasket as well as the lock nut onto the tailpiece.
2.Place the drain body at the proper position, and then tighten up the lock nut.

Features

Material：Brass+stainless steel

SIZE IN MM